Angular contact ball bearing 3212 A SKF

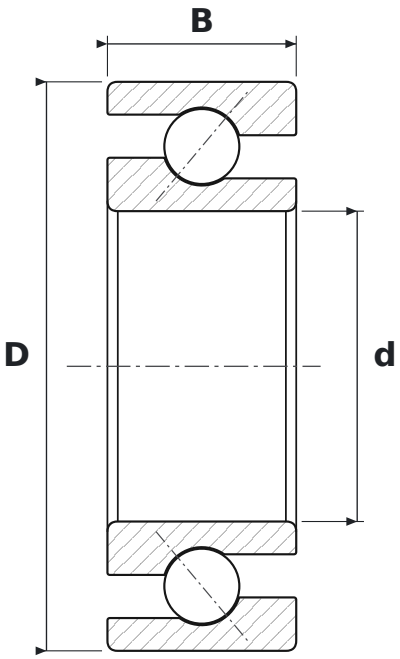

DIMENSIONS

d	bore diameter	**60 mm**
D	outside diameter	**110 mm**
B	width	**36.5 mm**

SPECIFICATIONS

Manufacturer	**SKF**
Manufacturer designation	**3212 A**
Rolling elements	**double-row ball bearing**
Seal	**open – no seals**
Radial internal clearance	**CN – normal**