# Angular contact ball bearing 3212 ATN9 SKF

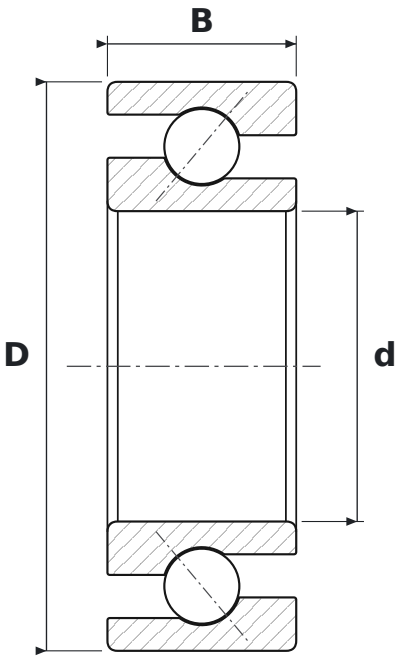


## DIMENSIONS

| | | |
|---|---|---|
| **d** | bore diameter | **60 mm** |
| **D** | outside diameter | **110 mm** |
| **B** | width | **36.5 mm** |

## WHAT 3212 ATN9 MEANS

| | |
|---|---|
| **A** | łożysko dwurzędowe bez otworów do wprowadzania kulek; w łożysku jednorzędowym kąt działania 30° |
| **TN9** | glass-fibre reinforced PA66 cage (SKF) |

## SPECIFICATIONS

| | |
|---|---|
| Manufacturer | **SKF** |
| Manufacturer designation | **3212 ATN9** |
| Rolling elements | **double-row ball bearing** |
| Mass | **1.249 kg** |