Angular contact ball bearing 3212-B-TV-C3 NKE

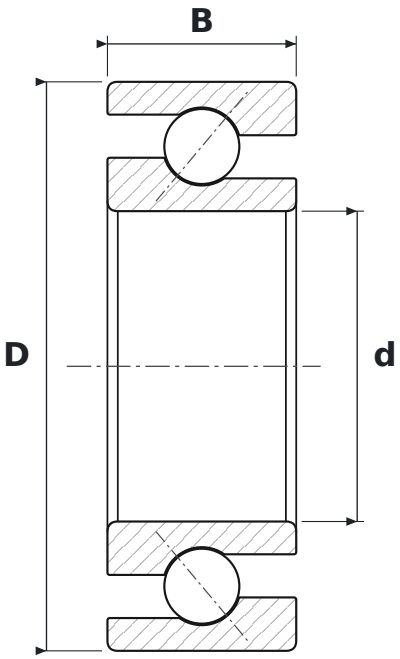

DIMENSIONS

d	bore diameter	**60 mm**
D	outside diameter	**110 mm**
B	width	**36.5 mm**

WHAT 3212-B-TV-C3 MEANS

B	40° contact angle
TV	glass-fibre reinforced polyamide cage (FAG)
C3	radial clearance greater than normal

SPECIFICATIONS

Manufacturer	**NKE**
Manufacturer designation	**3212-B-TV-C3**
Rolling elements	**double-row ball bearing**