Angular contact ball bearing 3212 BTV NKE

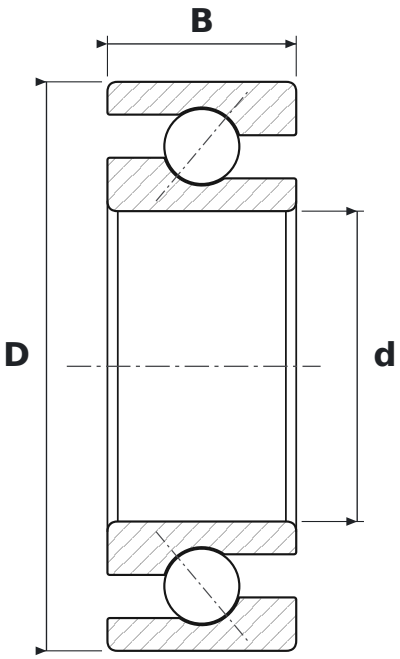

DIMENSIONS

d	bore diameter	**60 mm**
D	outside diameter	**110 mm**
B	width	**36.5 mm**

WHAT 3212 BTV MEANS

B	40° contact angle
TV	glass-fibre reinforced polyamide cage (FAG)

SPECIFICATIONS

Manufacturer	**NKE**
Manufacturer designation	**3212 BTV**
Rolling elements	**double-row ball bearing**
Mass	**1.36 kg**