Angular contact ball bearing 3213 A SKF

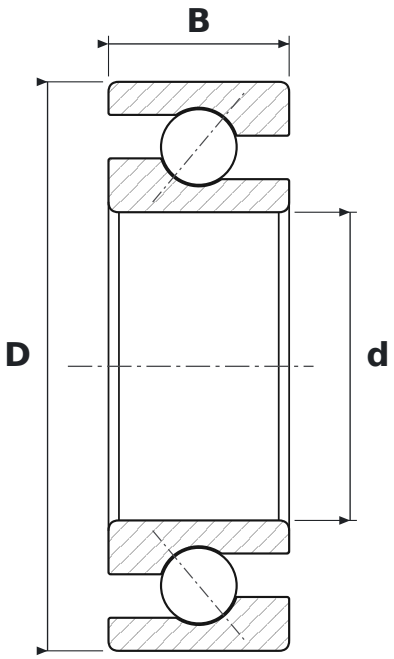

DIMENSIONS

d	bore diameter	**65 mm**
D	outside diameter	**120 mm**
B	width	**38.1 mm**

SPECIFICATIONS

Manufacturer	**SKF**
Manufacturer designation	**3213 A**
Rolling elements	**double-row ball bearing**
Seal	**open – no seals**
Radial internal clearance	**CN – normal**