Angular contact ball bearing 3213 B-2RSTV NKE

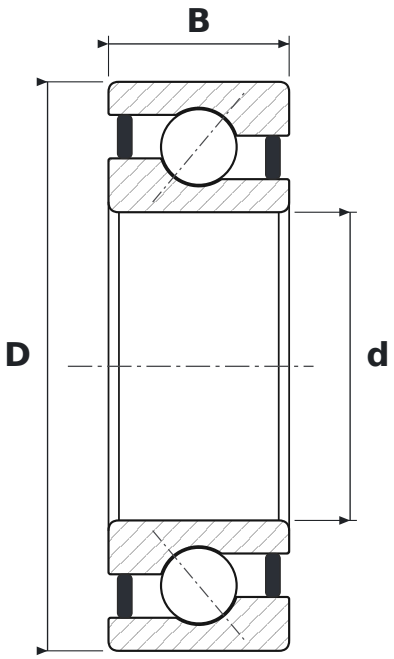

DIMENSIONS

d	bore diameter	**65 mm**
D	outside diameter	**120 mm**
B	width	**38.1 mm**

WHAT 3213 B-2RSTV MEANS

B	40° contact angle
2RS	contact rubber seals, both sides
TV	glass-fibre reinforced polyamide cage (FAG)

SPECIFICATIONS

Manufacturer	**NKE**
Manufacturer designation	**3213 B-2RSTV**
Rolling elements	**double-row ball bearing**