Angular contact ball bearing 3217 NKE

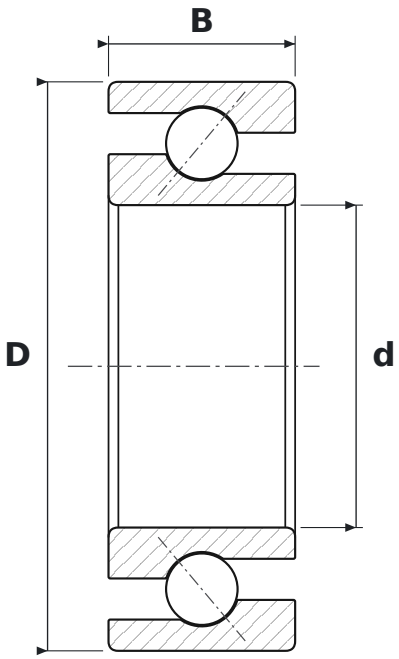

DIMENSIONS

d	bore diameter	**85 mm**
D	outside diameter	**150 mm**
B	width	**49.2 mm**

SPECIFICATIONS

Manufacturer	**NKE**
Manufacturer designation	**3217**
Rolling elements	**double-row ball bearing**
Seal	**open – no seals**
Radial internal clearance	**CN – normal**