Angular contact ball bearing 3218 NKE

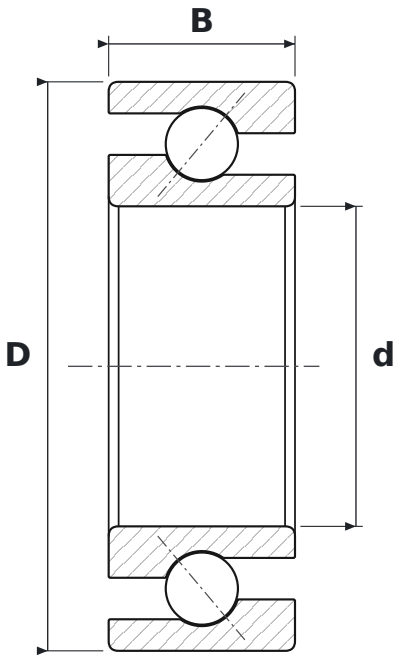

DIMENSIONS

d	bore diameter	**90 mm**
D	outside diameter	**160 mm**
B	width	**52.4 mm**

SPECIFICATIONS

Manufacturer	**NKE**
Manufacturer designation	**3218**
Rolling elements	**double-row ball bearing**
Seal	**open – no seals**
Radial internal clearance	**CN – normal**