CASTOMER

DATASHEET

Angular contact ball bearing 3218 A SKF

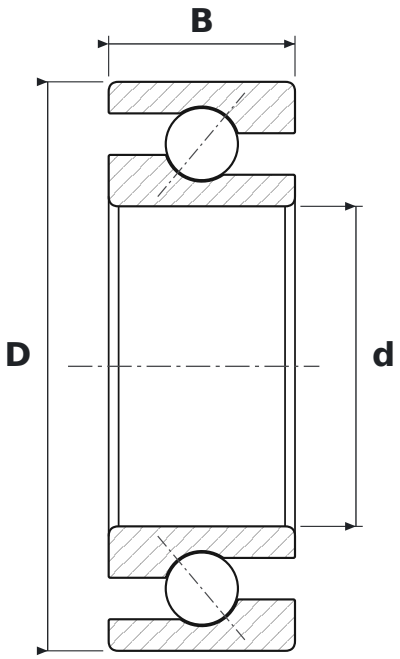

DIMENSIONS

d	bore diameter	**90 mm**
D	outside diameter	**160 mm**
B	width	**52.4 mm**

SPECIFICATIONS

Manufacturer	**SKF**
Manufacturer designation	**3218 A**
Rolling elements	**double-row ball bearing**
Seal	**open – no seals**
Radial internal clearance	**CN – normal**
Mass	**3.73 kg**