Angular contact ball bearing 3218-C3 FAG

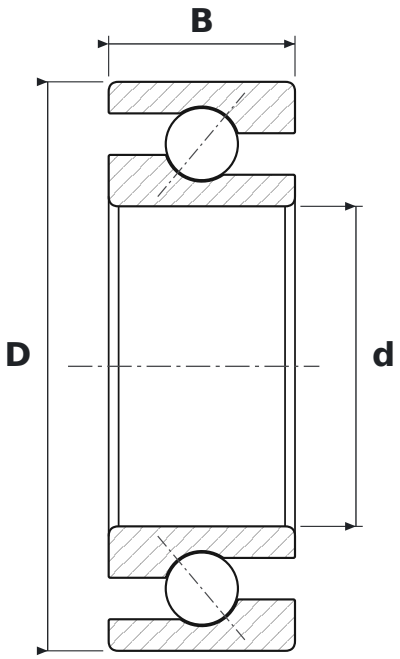

DIMENSIONS

d	bore diameter	**90 mm**
D	outside diameter	**160 mm**
B	width	**52.4 mm**

SPECIFICATIONS

Manufacturer	**FAG**
Manufacturer designation	**3218-C3**
Rolling elements	**double-row ball bearing**
C3	**radial clearance greater than normal**
Seal	**open – no seals**
Mass	**4.14 kg**