CASTOMER

DATASHEET

Angular contact ball bearing 3218 MC3 NKE

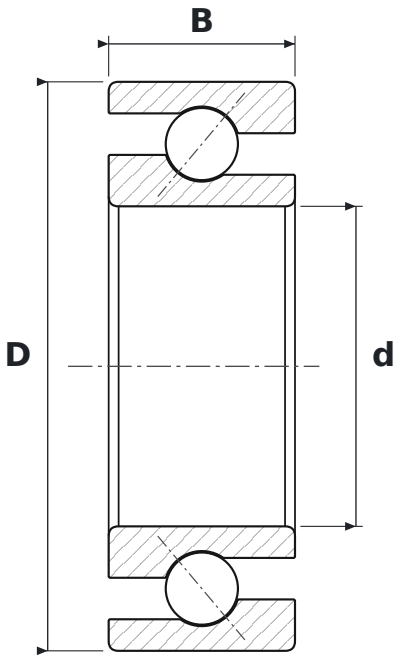

DIMENSIONS

d	bore diameter	**90 mm**
D	outside diameter	**160 mm**
B	width	**52.4 mm**

WHAT 3218 MC3 MEANS

M	machined brass cage
C3	radial clearance greater than normal

SPECIFICATIONS

Manufacturer	**NKE**
Manufacturer designation	**3218 MC3**
Rolling elements	**double-row ball bearing**
Mass	**4.19 kg**