Angular contact ball bearing 3219 A SKF

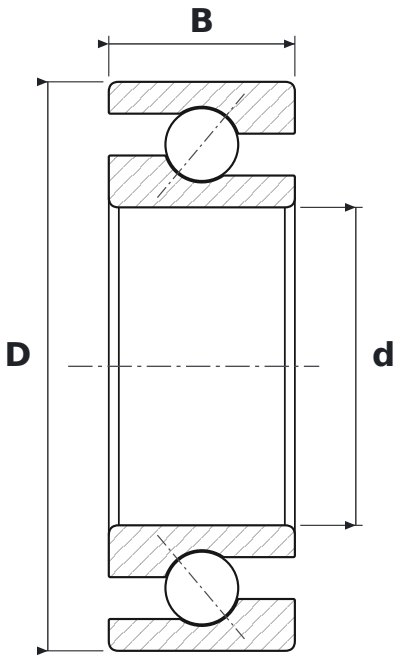

DIMENSIONS

d	bore diameter	**95 mm**
D	outside diameter	**170 mm**
B	width	**55.6 mm**

SPECIFICATIONS

Manufacturer	**SKF**
Manufacturer designation	**3219 A**
Rolling elements	**double-row ball bearing**
Seal	**open – no seals**
Radial internal clearance	**CN – normal**