Angular contact ball bearing 3219 MC3 NKE

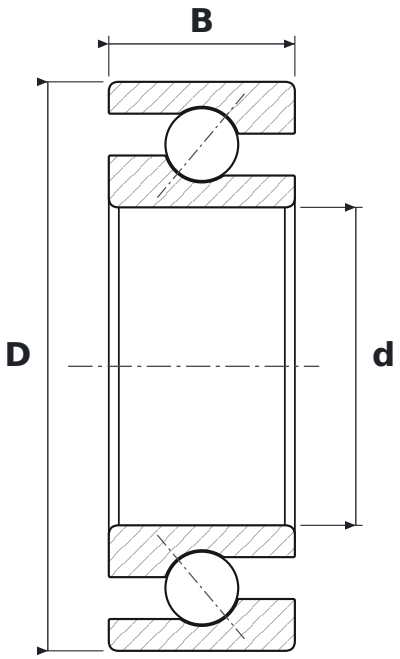

DIMENSIONS

d	bore diameter	**95 mm**
D	outside diameter	**170 mm**
B	width	**55.6 mm**

WHAT 3219 MC3 MEANS

M	machined brass cage
C3	radial clearance greater than normal

SPECIFICATIONS

Manufacturer	**NKE**
Manufacturer designation	**3219 MC3**
Rolling elements	**double-row ball bearing**
Mass	**5.135 kg**