CASTOMER

DATASHEET

Deep groove ball bearing 3805-2RS NKE

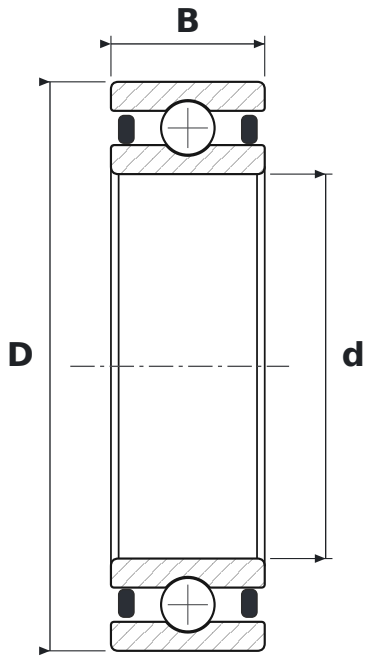

DIMENSIONS

d	bore diameter	**25 mm**
D	outside diameter	**37 mm**
B	width	**10 mm**

SPECIFICATIONS

Manufacturer	**NKE**
Manufacturer designation	**3805-2RS**
Rolling elements	**single-row ball bearing**
2RS	**contact rubber seals, both sides**
Radial internal clearance	**CN – normal**