Deep groove ball bearing 4207 BTV NKE

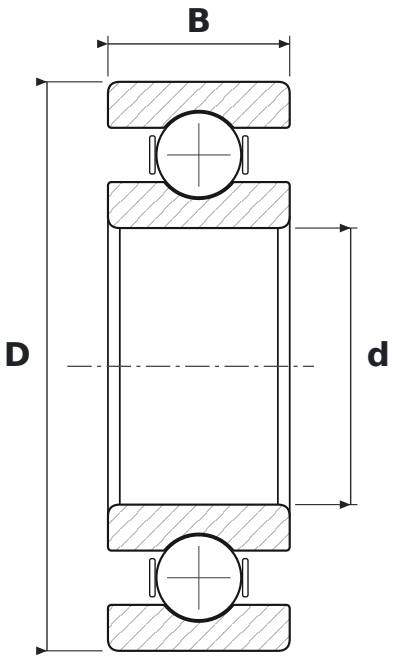

DIMENSIONS

d	bore diameter	**35 mm**
D	outside diameter	**72 mm**
B	width	**23 mm**

WHAT 4207 BTV MEANS

B	40° contact angle
TV	glass-fibre reinforced polyamide cage (FAG)

SPECIFICATIONS

Manufacturer	**NKE**
Manufacturer designation	**4207 BTV**
Rolling elements	**double-row ball bearing**
Mass	**0.43 kg**