Deep groove ball bearing 4209 BTV NKE

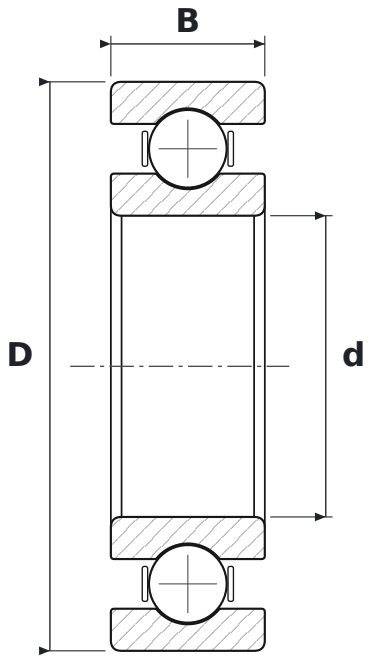

DIMENSIONS

d	bore diameter	**45 mm**
D	outside diameter	**85 mm**
B	width	**23 mm**

WHAT 4209 BTV MEANS

B	40° contact angle
TV	glass-fibre reinforced polyamide cage (FAG)

SPECIFICATIONS

Manufacturer	**NKE**
Manufacturer designation	**4209 BTV**
Rolling elements	**double-row ball bearing**
Mass	**0.592 kg**