Deep groove ball bearing 4213 ATN9 SKF

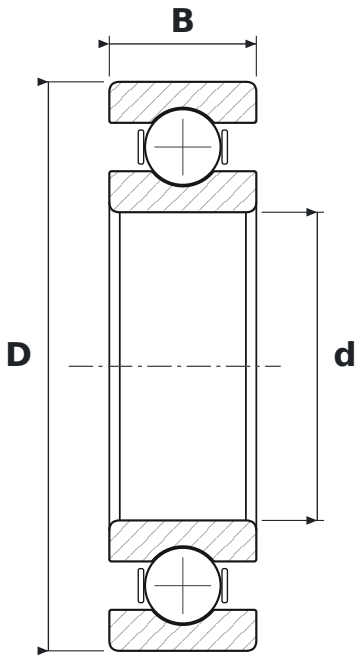

DIMENSIONS

d	bore diameter	**65 mm**
D	outside diameter	**120 mm**
B	width	**31 mm**

WHAT 4213 ATN9 MEANS

A	zmieniona konstrukcja wewnętrzna
TN9	glass-fibre reinforced PA66 cage (SKF)

SPECIFICATIONS

Manufacturer	**SKF**
Manufacturer designation	**4213 ATN9**
Rolling elements	**double-row ball bearing**
Mass	**1.415 kg**