Deep groove ball bearing 4214 BTV NKE

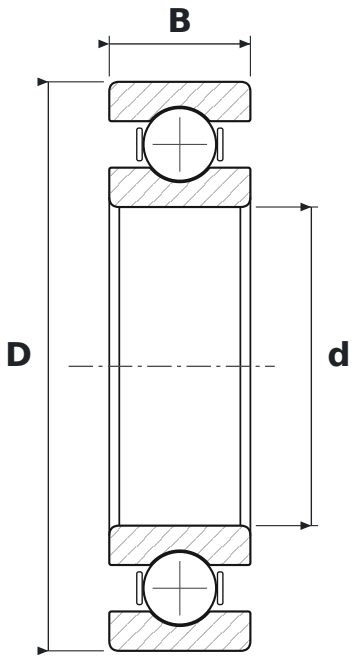

DIMENSIONS

d	bore diameter	**70 mm**
D	outside diameter	**125 mm**
B	width	**31 mm**

WHAT 4214 BTV MEANS

B	40° contact angle
TV	glass-fibre reinforced polyamide cage (FAG)

SPECIFICATIONS

Manufacturer	**NKE**
Manufacturer designation	**4214 BTV**
Rolling elements	**double-row ball bearing**