Deep groove ball bearing 4311 BTV NKE

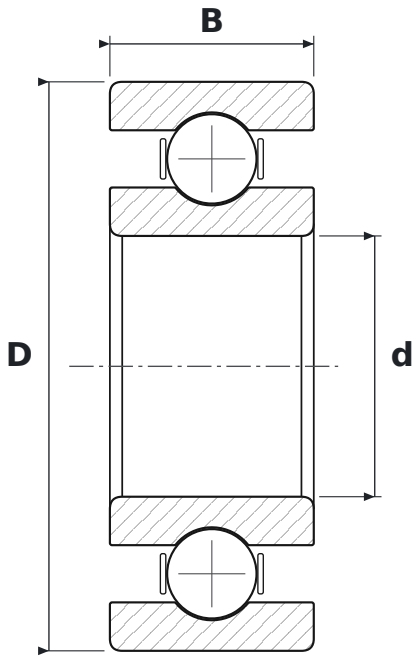

DIMENSIONS

d	bore diameter	**55 mm**
D	outside diameter	**120 mm**
B	width	**43 mm**

WHAT 4311 BTV MEANS

B	40° contact angle
TV	glass-fibre reinforced polyamide cage (FAG)

SPECIFICATIONS

Manufacturer	**NKE**
Manufacturer designation	**4311 BTV**
Rolling elements	**double-row ball bearing**
Mass	**2.08 kg**