Deep groove ball bearing 4311-B-TVH FAG

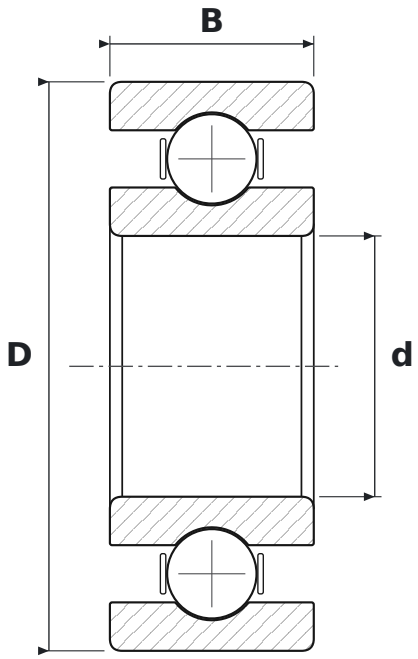

DIMENSIONS

d	bore diameter	**55 mm**
D	outside diameter	**120 mm**
B	width	**43 mm**

WHAT 4311-B-TVH MEANS

B	40° contact angle
TVH	solid polyamide cage (FAG)

SPECIFICATIONS

Manufacturer	**FAG**
Manufacturer designation	**4311-B-TVH**
Rolling elements	**double-row ball bearing**
Mass	**2.08 kg**