Thrust ball bearing 51202 G NACHI

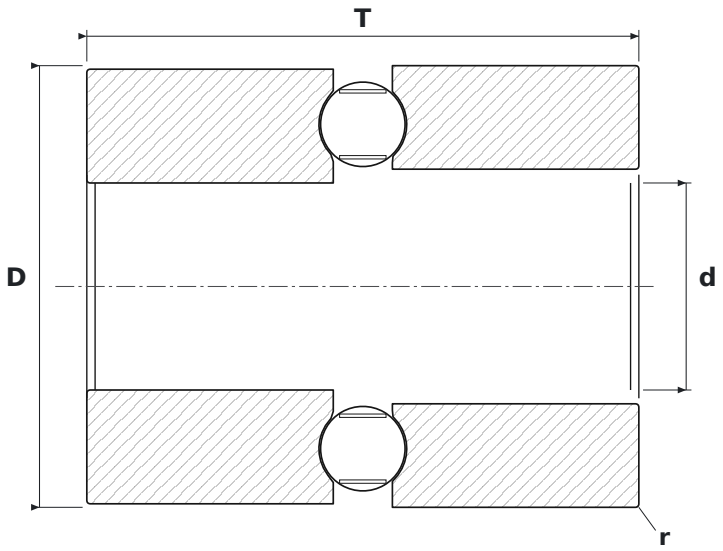

DIMENSIONS

d	bore diameter	**15 mm**
D	outside diameter	**32 mm**
T	bearing height	**40 mm**
d1	shaft washer outside diameter	**32 mm**
D1	housing washer bore diameter	**17 mm**
r	chamfer dimension (min.)	**0.6 mm**

SPECIFICATIONS

Manufacturer	**NACHI**
Manufacturer designation	**51202 G**
r min – chamfer dimension	**0.6 mm**
Rolling elements	**single-row ball bearing**
Basic dynamic load rating C	**16.5 kN**
Basic static load rating C0	**24.8 kN**
Limiting speed	**6,700 r/min**
Reference speed	**14,300 r/min**
Mass	**49 kg**