Thrust ball bearing 51326-MP FAG

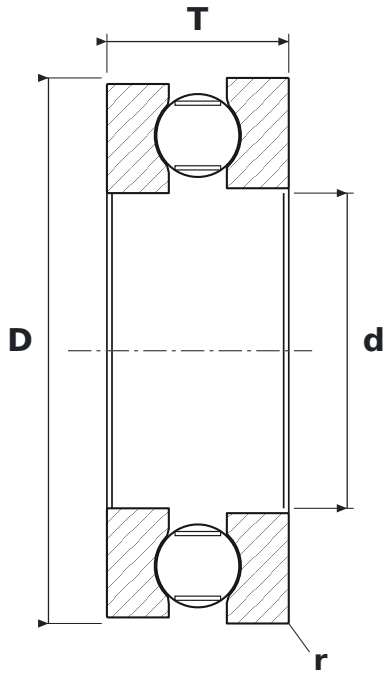

DIMENSIONS

d	bore diameter	**130 mm**
D	outside diameter	**225 mm**
T	bearing height	**75 mm**
d1	shaft washer outside diameter	**220 mm**
D1	housing washer bore diameter	**134 mm**
r	chamfer dimension (min.)	**2.1 mm**

SPECIFICATIONS

Manufacturer	**FAG**
Manufacturer designation	**51326-MP**
r min – chamfer dimension	**2.1 mm**
Rolling elements	**single-row ball bearing**
MP	**koszyk mosiężny masywny okienkowy, prowadzony na kulkach**
Cage	**Brass**
Basic dynamic load rating C	**360 kN**
Basic static load rating C0	**1,050 kN**
Limiting speed	**1,490 r/min**
Reference speed	**2,950 r/min**
Mass	**12.92 kg**