Thrust ball bearing 51334 X NSK

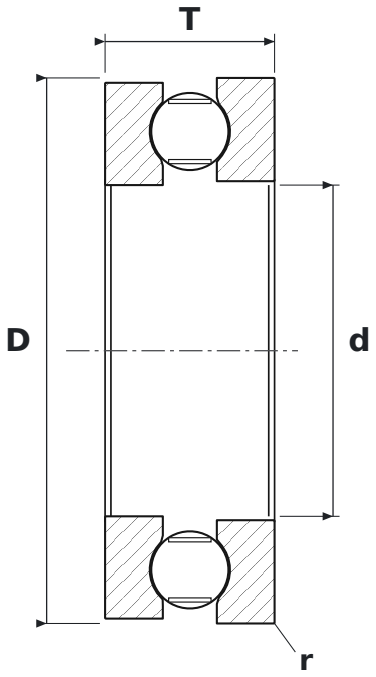

DIMENSIONS

d	bore diameter	**170 mm**
D	outside diameter	**280 mm**
T	bearing height	**87 mm**
d1	shaft washer outside diameter	**275 mm**
D1	housing washer bore diameter	**174 mm**
r	chamfer dimension (min.)	**3 mm**

SPECIFICATIONS

Manufacturer	**NSK**
Manufacturer designation	**51334 X**
r min – chamfer dimension	**3 mm**
Rolling elements	**single-row ball bearing**
Basic dynamic load rating C	**440 kN**
Basic static load rating C0	**1,560 kN**
Limiting speed	**1,220 r/min**
Reference speed	**2,170 r/min**
Mass	**20.28 kg**