Deep groove ball bearing 5209-2NS NACHI

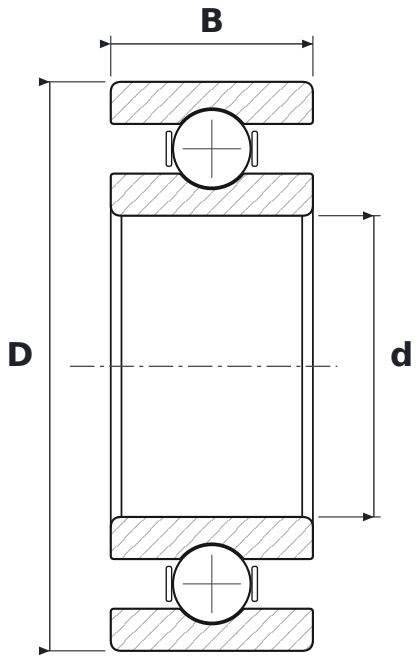

DIMENSIONS

d	bore diameter	**45 mm**
D	outside diameter	**85 mm**
B	width	**30.2 mm**

SPECIFICATIONS

Manufacturer	**NACHI**
Manufacturer designation	**5209-2NS**
Rolling elements	**single-row ball bearing**
Seal	**open – no seals**
Radial internal clearance	**CN – normal**