Deep groove ball bearing 5209 C3 NACHI

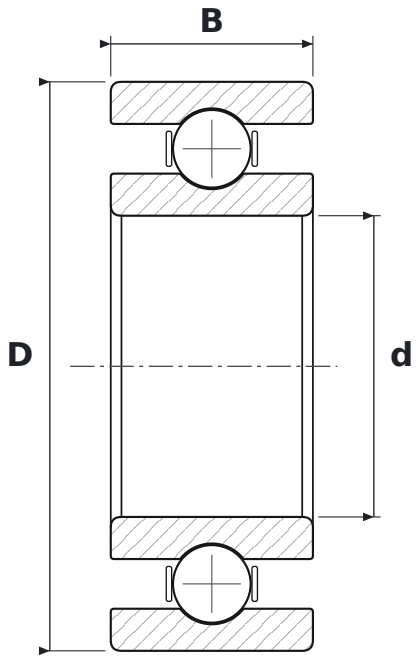

DIMENSIONS

d	bore diameter	**45 mm**
D	outside diameter	**85 mm**
B	width	**30.2 mm**

SPECIFICATIONS

Manufacturer	**NACHI**
Manufacturer designation	**5209 C3**
Rolling elements	**single-row ball bearing**
C3	**radial clearance greater than normal**
Seal	**open – no seals**