CASTOMER

DATASHEET

Deep groove ball bearing 60/28-ZZ NSK

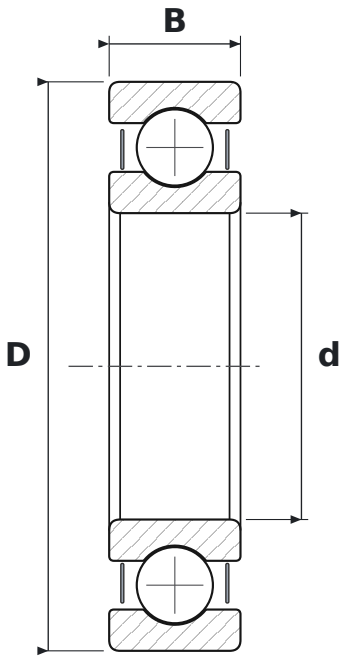

DIMENSIONS

d	bore diameter	**28 mm**
D	outside diameter	**52 mm**
B	width	**12 mm**

WHAT 60/28-ZZ MEANS

60	łożysko kulkowe zwykłe (6), seria średnic 0 – bardzo lekka
ZZ	blaszki ochronne, dwustronne

SPECIFICATIONS

Manufacturer	**NSK**
Manufacturer designation	**60/28-ZZ**
Rolling elements	**single-row ball bearing**
Mass	**0.095 kg**