Deep groove ball bearing 60/32 NKE

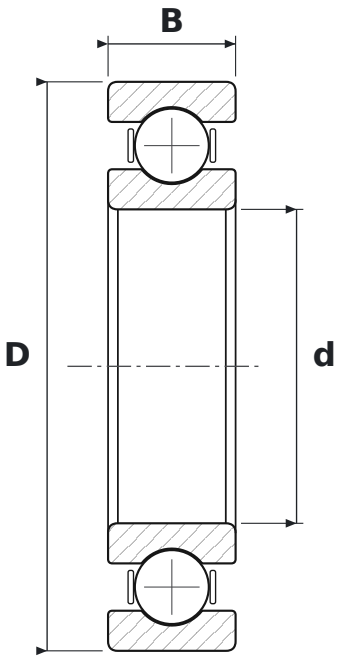

DIMENSIONS

d	bore diameter	**32 mm**
D	outside diameter	**58 mm**
B	width	**13 mm**

SPECIFICATIONS

Manufacturer	**NKE**
Manufacturer designation	**60/32**
Rolling elements	**single-row ball bearing**
Radial internal clearance	**CN – normal**