Deep groove ball bearing 6000-2Z/C3LT SKF

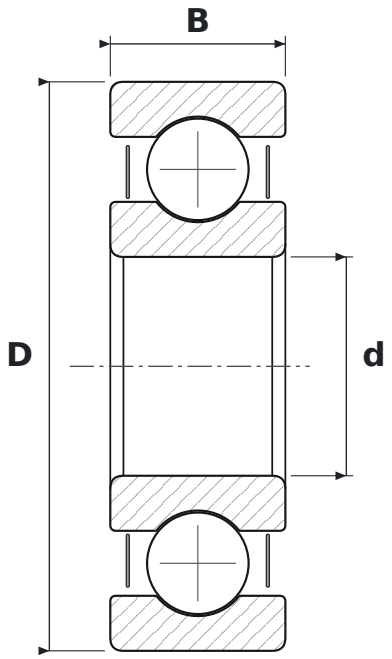

DIMENSIONS

d	bore diameter	**10 mm**
D	outside diameter	**26 mm**
B	width	**8 mm**

WHAT 6000-2Z/C3LT MEANS

60	łożysko kulkowe zwykłe (6), seria średnic 0 – bardzo lekka
2Z	steel shields, both sides
C3	radial clearance greater than normal
LT	smar niskotemperaturowy: mydło litowe, olej diestrowy, NLGI 2

SPECIFICATIONS

Manufacturer	**SKF**
Manufacturer designation	**6000-2Z/C3LT**
Rolling elements	**single-row ball bearing**
Basic dynamic load rating C	**4.75 kN**
Basic static load rating C0	**1.96 kN**
Mass	**0.019 kg**