Deep groove ball bearing 6000-C-C3 FAG

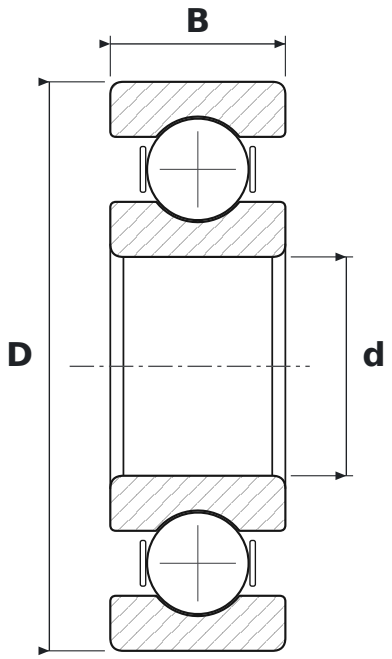

DIMENSIONS

d	bore diameter	**10 mm**
D	outside diameter	**26 mm**
B	width	**8 mm**

WHAT 6000-C-C3 MEANS

60	łożysko kulkowe zwykłe (6), seria średnic 0 – bardzo lekka
C	generation C – revised internal design (FAG)
C3	radial clearance greater than normal

SPECIFICATIONS

Manufacturer	**FAG**
Manufacturer designation	**6000-C-C3**
Rolling elements	**single-row ball bearing**
Mass	**0.019 kg**