Deep groove ball bearing 6001-2RSC3LHT23 SKF

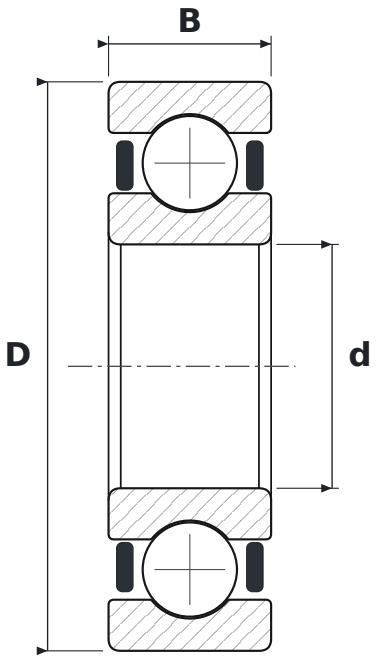

DIMENSIONS

d	bore diameter	**12 mm**
D	outside diameter	**28 mm**
B	width	**8 mm**

WHAT 6001-2RSC3LHT23 MEANS

60	łożysko kulkowe zwykłe (6), seria średnic 0 – bardzo lekka
2RS	contact rubber seals, both sides
C3	radial clearance greater than normal
LHT23	smar o szerokim zakresie temperatur do cichej pracy: mydło litowe, olej estrowy, NLGI 2–3

SPECIFICATIONS

Manufacturer	**SKF**
Manufacturer designation	**6001-2RSC3LHT23**
Rolling elements	**single-row ball bearing**
Basic dynamic load rating C	**5.4 kN**
Basic static load rating C0	**2.36 kN**