# Deep groove ball bearing 6001-C FAG

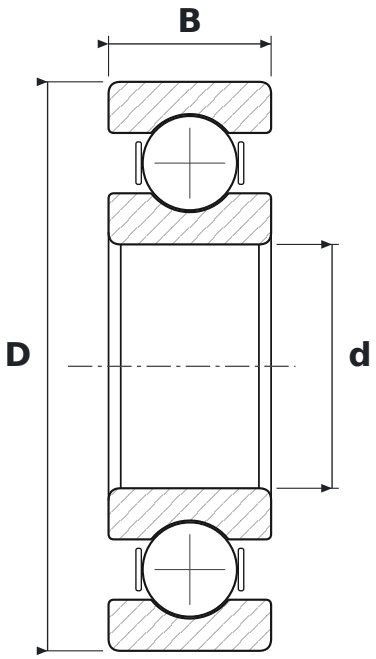


## DIMENSIONS

| | | |
|---|---|---|
| **d** | bore diameter | **12 mm** |
| **D** | outside diameter | **28 mm** |
| **B** | width | **8 mm** |

## WHAT 6001-C MEANS

| | |
|---|---|
| **60** | łożysko kulkowe zwykłe (6), seria średnic 0 – bardzo lekka |
| **C** | generation C – revised internal design (FAG) |

## SPECIFICATIONS

| | |
|---|---|
| Manufacturer | **FAG** |
| Manufacturer designation | **6001-C** |
| Rolling elements | **single-row ball bearing** |
| Mass | **0.02 kg** |