Deep groove ball bearing 6001 FT150ZZ SNR

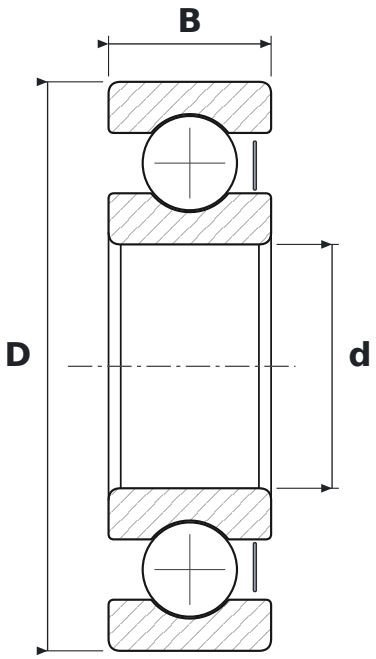

DIMENSIONS

d	bore diameter	**12 mm**
D	outside diameter	**28 mm**
B	width	**8 mm**

WHAT 6001 FT150ZZ MEANS

60	łożysko kulkowe zwykłe (6), seria średnic 0 – bardzo lekka
FT150ZZ	wykonanie do wysokich temperatur, do +150 °C, blaszki ochronne z obu stron

SPECIFICATIONS

Manufacturer	**SNR**
Manufacturer designation	**6001 FT150ZZ**
Rolling elements	**single-row ball bearing**
Mass	**0.024 kg**