Deep groove ball bearing 6001 JRXLLUCM/5K NTN

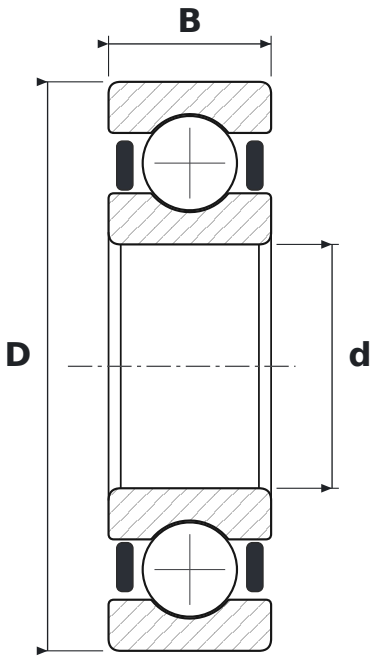

DIMENSIONS

d	bore diameter	**12 mm**
D	outside diameter	**28 mm**
B	width	**8 mm**

WHAT 6001 JRXLLUCM/5K MEANS

60	łożysko kulkowe zwykłe (6), seria średnic 0 – bardzo lekka
5K	smar Kyodo Yushi Multemp SRL (od −40 do +150 °C)

SPECIFICATIONS

Manufacturer	**NTN**
Manufacturer designation	**6001 JRXLLUCM/5K**
Rolling elements	**single-row ball bearing**