# Deep groove ball bearing 6001-ZECM NACHI

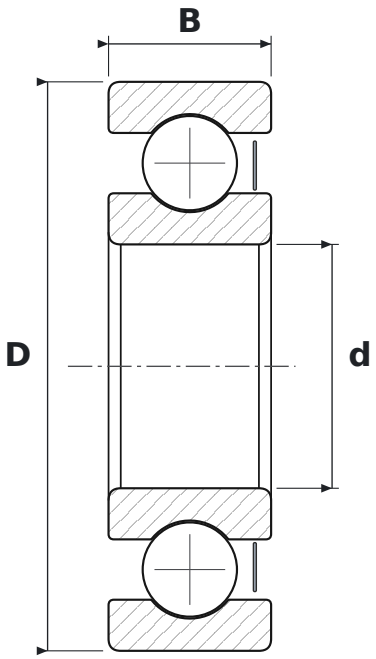


## DIMENSIONS

| | | |
|---|---|---|
| **d** | bore diameter | **12 mm** |
| **D** | outside diameter | **28 mm** |
| **B** | width | **8 mm** |

## WHAT 6001-ZECM MEANS

| | |
|---|---|
| **60** | łożysko kulkowe zwykłe (6), seria średnic 0 – bardzo lekka |
| **ZE** | blaszka ochronna, jednostronna |
| **CM** | clearance for electric motors (quiet running) |

## SPECIFICATIONS

| | |
|---|---|
| Manufacturer | **NACHI** |
| Manufacturer designation | **6001-ZECM** |
| Rolling elements | **single-row ball bearing** |