Deep groove ball bearing 6002 NSK

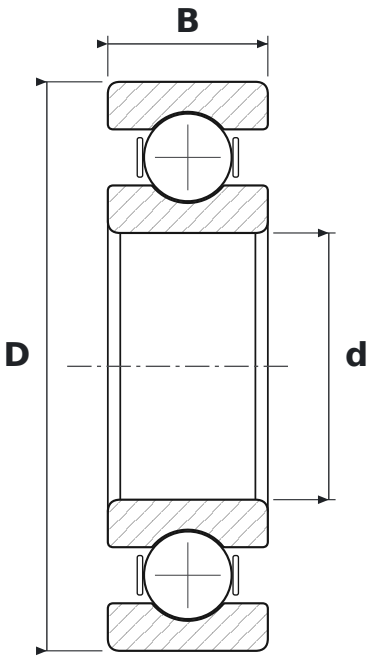

DIMENSIONS

d	bore diameter	**15 mm**
D	outside diameter	**32 mm**
B	width	**9 mm**

SPECIFICATIONS

Manufacturer	**NSK**
Manufacturer designation	**6002**
Rolling elements	**single-row ball bearing**
Seal	**open – no seals**
Radial internal clearance	**CN – normal**
Mass	**0.03 kg**