Deep groove ball bearing 6002-2Z/LHT23 SKF

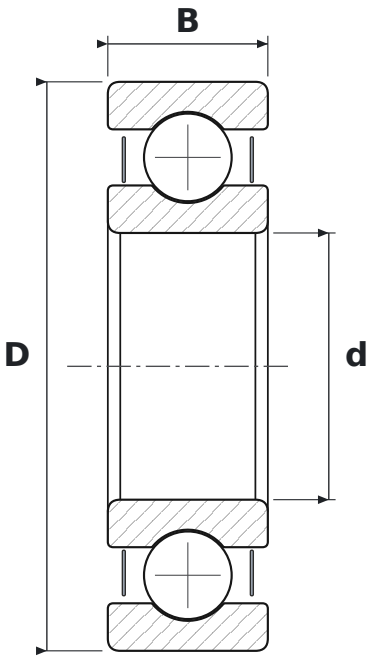

DIMENSIONS

d	bore diameter	**15 mm**
D	outside diameter	**32 mm**
B	width	**9 mm**

WHAT 6002-2Z/LHT23 MEANS

60	łożysko kulkowe zwykłe (6), seria średnic 0 – bardzo lekka
2Z	steel shields, both sides
LHT23	smar o szerokim zakresie temperatur do cichej pracy: mydło litowe, olej estrowy, NLGI 2–3

SPECIFICATIONS

Manufacturer	**SKF**
Manufacturer designation	**6002-2Z/LHT23**
Rolling elements	**single-row ball bearing**
Basic dynamic load rating C	**5.9 kN**
Basic static load rating C0	**2.85 kN**
Mass	**0.031 kg**