Deep groove ball bearing 6003-2Z-C3 FAG

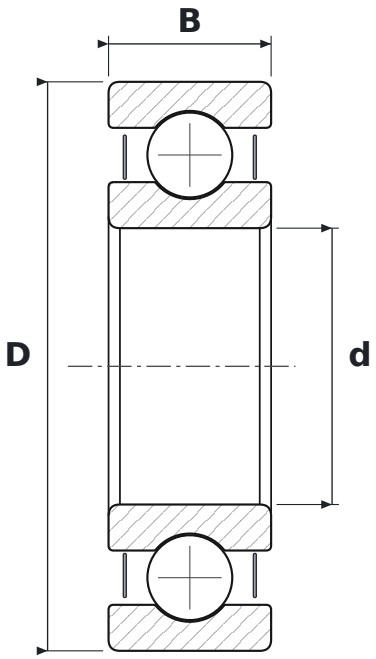

DIMENSIONS

d	bore diameter	**17 mm**
D	outside diameter	**35 mm**
B	width	**10 mm**

WHAT 6003-2Z-C3 MEANS

60	łożysko kulkowe zwykłe (6), seria średnic 0 – bardzo lekka
2Z	steel shields, both sides
C3	radial clearance greater than normal

SPECIFICATIONS

Manufacturer	**FAG**
Manufacturer designation	**6003-2Z-C3**
Rolling elements	**single-row ball bearing**
Mass	**0.037 kg**