Deep groove ball bearing 6003-Z NKE

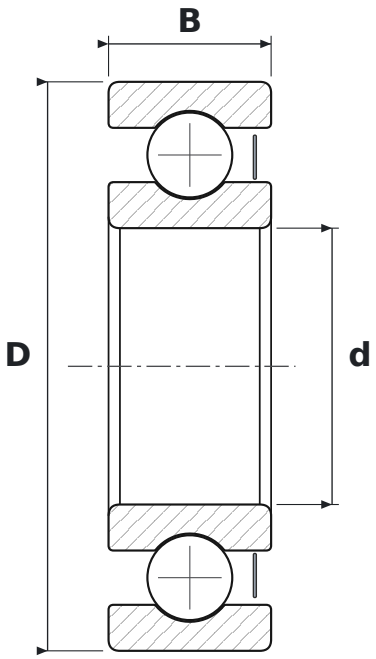

DIMENSIONS

d	bore diameter	**17 mm**
D	outside diameter	**35 mm**
B	width	**10 mm**

WHAT 6003-Z MEANS

60	łożysko kulkowe zwykłe (6), seria średnic 0 – bardzo lekka
Z	steel shield, one side

SPECIFICATIONS

Manufacturer	**NKE**
Manufacturer designation	**6003-Z**
Rolling elements	**single-row ball bearing**
Mass	**0.03 kg**