Deep groove ball bearing 6003-ZZENRCM NACHI

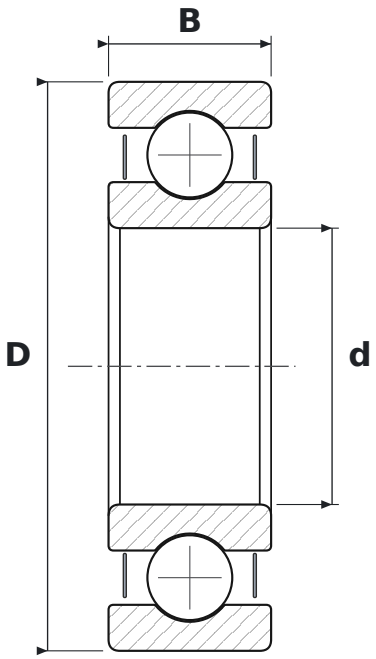

DIMENSIONS

d	bore diameter	**17 mm**
D	outside diameter	**35 mm**
B	width	**10 mm**

WHAT 6003-ZZENRCM MEANS

60	łożysko kulkowe zwykłe (6), seria średnic 0 – bardzo lekka
ZZE	blaszki ochronne, dwustronne
NR	snap ring groove with snap ring
CM	clearance for electric motors (quiet running)

SPECIFICATIONS

Manufacturer	**NACHI**
Manufacturer designation	**6003-ZZENRCM**
Rolling elements	**single-row ball bearing**