Deep groove ball bearing 6004 F604 SNR

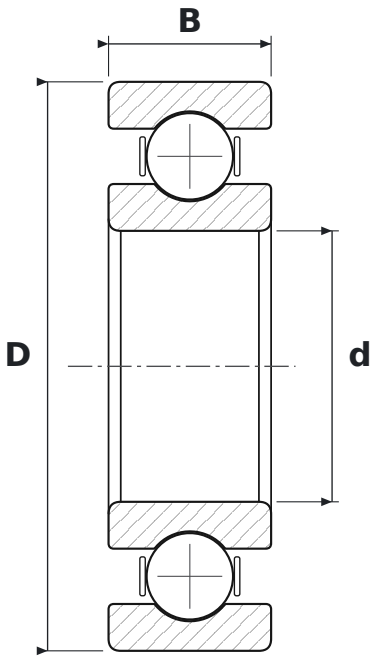

DIMENSIONS

d	bore diameter	**20 mm**
D	outside diameter	**42 mm**
B	width	**12 mm**

SPECIFICATIONS

Manufacturer	**SNR**
Manufacturer designation	**6004 F604**
Rolling elements	**single-row ball bearing**
Seal	**open – no seals**
Radial internal clearance	**CN – normal**
Mass	**0.079 kg**