Deep groove ball bearing 6004-NSE9CM NACHI

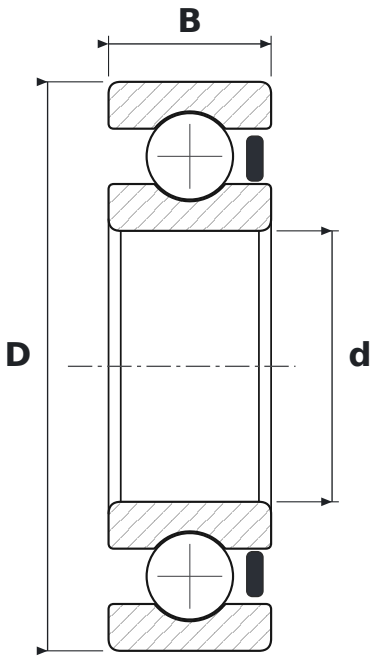

DIMENSIONS

d	bore diameter	**20 mm**
D	outside diameter	**42 mm**
B	width	**12 mm**

SPECIFICATIONS

Manufacturer	**NACHI**
Manufacturer designation	**6004-NSE9CM**
Rolling elements	**single-row ball bearing**
RS	**contact rubber seal, one side**
CM	**clearance for electric motors (quiet running)**
Radial internal clearance	**CN – normal**