Deep groove ball bearing 6004-ZC3 SKF

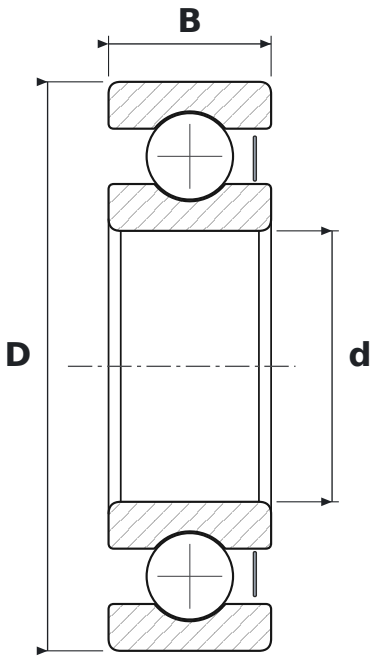

DIMENSIONS

d	bore diameter	**20 mm**
D	outside diameter	**42 mm**
B	width	**12 mm**

WHAT 6004-ZC3 MEANS

60	łożysko kulkowe zwykłe (6), seria średnic 0 – bardzo lekka
Z	steel shield, one side
C3	radial clearance greater than normal

SPECIFICATIONS

Manufacturer	**SKF**
Manufacturer designation	**6004-ZC3**
Rolling elements	**single-row ball bearing**
Basic dynamic load rating C	**9.95 kN**
Basic static load rating C0	**5 kN**
Mass	**0.067 kg**