CASTOMER

DATASHEET

Deep groove ball bearing 6005-2Z NKE

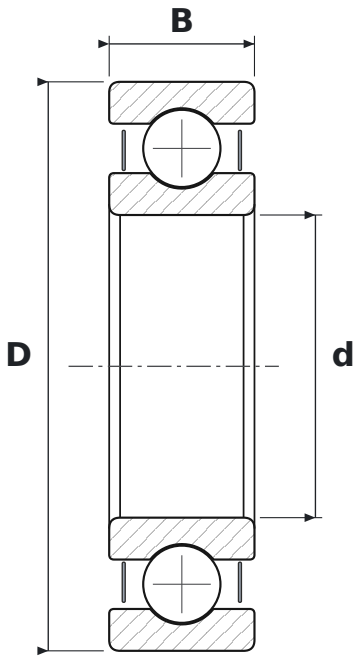

DIMENSIONS

d	bore diameter	**25 mm**
D	outside diameter	**47 mm**
B	width	**12 mm**

WHAT 6005-2Z MEANS

60	łożysko kulkowe zwykłe (6), seria średnic 0 – bardzo lekka
2Z	steel shields, both sides

SPECIFICATIONS

Manufacturer	**NKE**
Manufacturer designation	**6005-2Z**
Rolling elements	**single-row ball bearing**
Mass	**0.082 kg**