Deep groove ball bearing 6005-C FAG

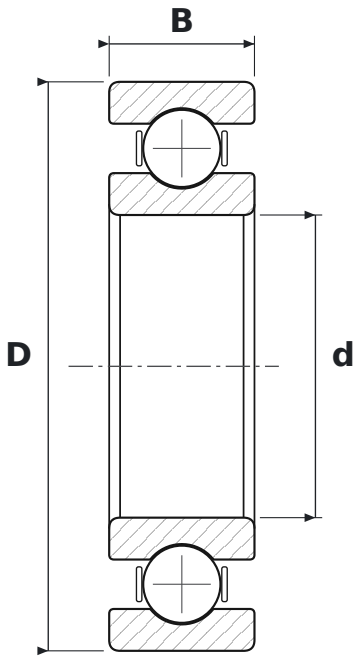

DIMENSIONS

d	bore diameter	**25 mm**
D	outside diameter	**47 mm**
B	width	**12 mm**

WHAT 6005-C MEANS

60	łożysko kulkowe zwykłe (6), seria średnic 0 – bardzo lekka
C	generation C – revised internal design (FAG)

SPECIFICATIONS

Manufacturer	**FAG**
Manufacturer designation	**6005-C**
Rolling elements	**single-row ball bearing**