# Deep groove ball bearing 6005 C3 NKE

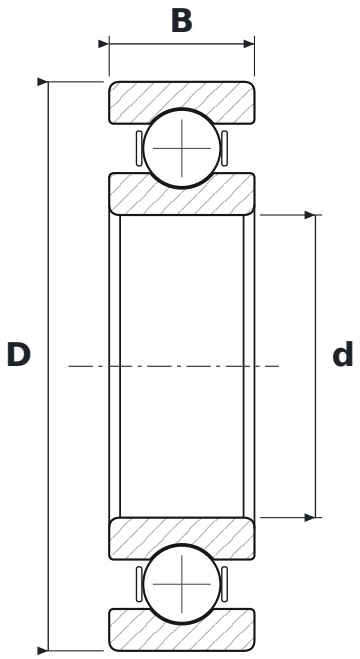


## DIMENSIONS

| | | |
|---|---|---|
| **d** | bore diameter | **25 mm** |
| **D** | outside diameter | **47 mm** |
| **B** | width | **12 mm** |

## WHAT 6005 C3 MEANS

| | |
|---|---|
| **60** | łożysko kulkowe zwykłe (6), seria średnic 0 – bardzo lekka |
| **C3** | radial clearance greater than normal |

## SPECIFICATIONS

| | |
|---|---|
| Manufacturer | **NKE** |
| Manufacturer designation | **6005 C3** |
| Rolling elements | **single-row ball bearing** |
| Mass | **0.079 kg** |