Deep groove ball bearing 6006-C-2Z-L038 FAG

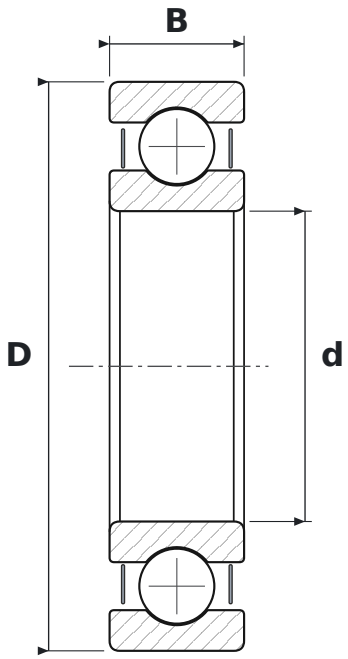

DIMENSIONS

d	bore diameter	**30 mm**
D	outside diameter	**55 mm**
B	width	**13 mm**

WHAT 6006-C-2Z-L038 MEANS

60	łożysko kulkowe zwykłe (6), seria średnic 0 – bardzo lekka
C	generation C – revised internal design (FAG)
2Z	steel shields, both sides

SPECIFICATIONS

Manufacturer	**FAG**
Manufacturer designation	**6006-C-2Z-L038**
Rolling elements	**single-row ball bearing**