Deep groove ball bearing 6007-C-2HRS FAG

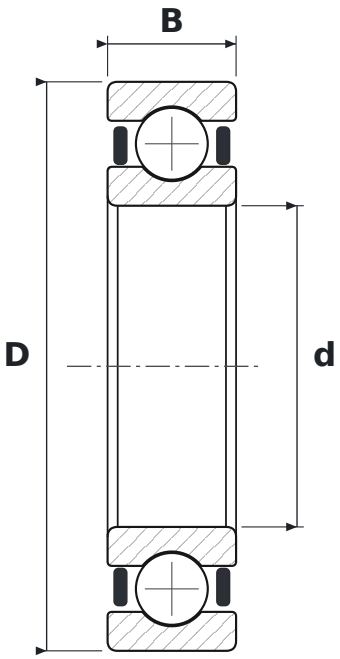

DIMENSIONS

d	bore diameter	**35 mm**
D	outside diameter	**62 mm**
B	width	**14 mm**

WHAT 6007-C-2HRS MEANS

60	łożysko kulkowe zwykłe (6), seria średnic 0 – bardzo lekka
C	generation C – revised internal design (FAG)
2HRS	uszczelnienia wargowe stykowe (NBR), dwustronne – warga przylega osiowo

SPECIFICATIONS

Manufacturer	**FAG**
Manufacturer designation	**6007-C-2HRS (-2RSR)**
Rolling elements	**single-row ball bearing**