Deep groove ball bearing 6007-Z NSK

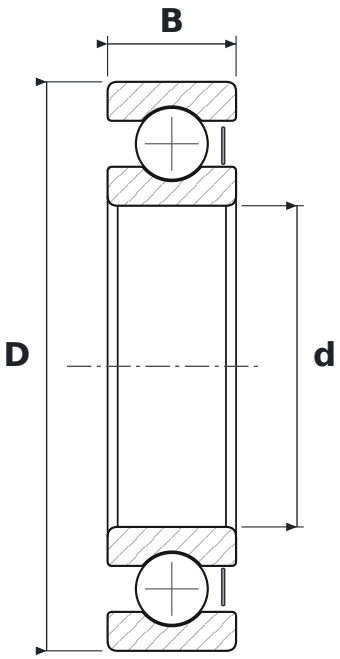

DIMENSIONS

d	bore diameter	**35 mm**
D	outside diameter	**62 mm**
B	width	**14 mm**

WHAT 6007-Z MEANS

60	łożysko kulkowe zwykłe (6), seria średnic 0 – bardzo lekka
Z	steel shield, one side

SPECIFICATIONS

Manufacturer	**NSK**
Manufacturer designation	**6007-Z**
Rolling elements	**single-row ball bearing**
Mass	**0.155 kg**