CASTOMER

DATASHEET

Deep groove ball bearing 6008-2Z ZEN

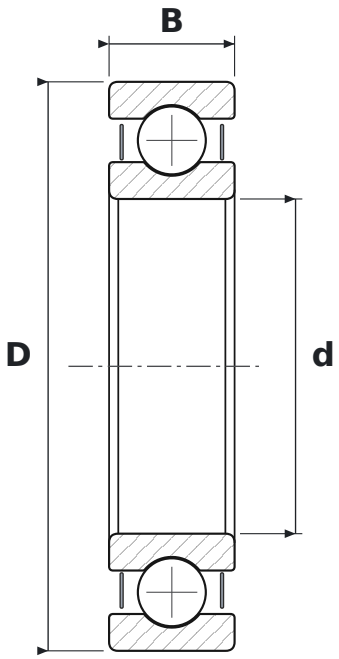

DIMENSIONS

d	bore diameter	**40 mm**
D	outside diameter	**68 mm**
B	width	**15 mm**

WHAT 6008-2Z MEANS

60	łożysko kulkowe zwykłe (6), seria średnic 0 – bardzo lekka
2Z	steel shields, both sides

SPECIFICATIONS

Manufacturer	**ZEN**
Manufacturer designation	**6008-2Z**
Rolling elements	**single-row ball bearing**