Deep groove ball bearing 6008 C3 NKE

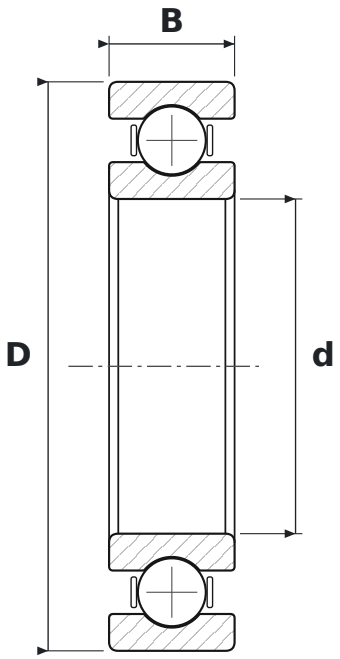

DIMENSIONS

d	bore diameter	**40 mm**
D	outside diameter	**68 mm**
B	width	**15 mm**

WHAT 6008 C3 MEANS

60	łożysko kulkowe zwykłe (6), seria średnic 0 – bardzo lekka
C3	radial clearance greater than normal

SPECIFICATIONS

Manufacturer	**NKE**
Manufacturer designation	**6008 C3**
Rolling elements	**single-row ball bearing**
Mass	**0.2 kg**